THIS DOCUMENT IS TRUE AND CORRECT AT TIME OF PUBLICATION. CONTINUED PRODUCT IMPROVEMENTS MAKE SPECIFICATIONS AND MEASUREMENTS SUBJECT TO CHANGE WITHOUT NOTICE.

NOTES:

1. TRAP, STOP VALVE AND ELECTRICAL OUTLET NOT FURNISHED.
2. ALLOW 4 INCHES [102 MM] MIN. PER SIDE FOR VENTILATION.

*3. RECOMMENDED ADULT BARRIER FREE HEIGHT INSTALLATION SHOWN. REDUCE HEIGHT BY 3 INCHES FOR INSTALLATIONS USED PRIMARILY BY CHILDREN AGES 12 AND YOUNGER. UNIT SHALL ALSO HAVE A MINIMUM CLEAR FLOOR SPACE 30[760] BY 48[1220]. ADJUST VERTICAL DIMENSIONS AS REQ'D TO COMPLY WITH FEDERAL, STATE, AND LOCAL CODES.

4. ALL DIMENSIONS ARE IN INCHES. DIMENSIONS IN BRACKETS [ ] ARE IN MILLIMETERS.

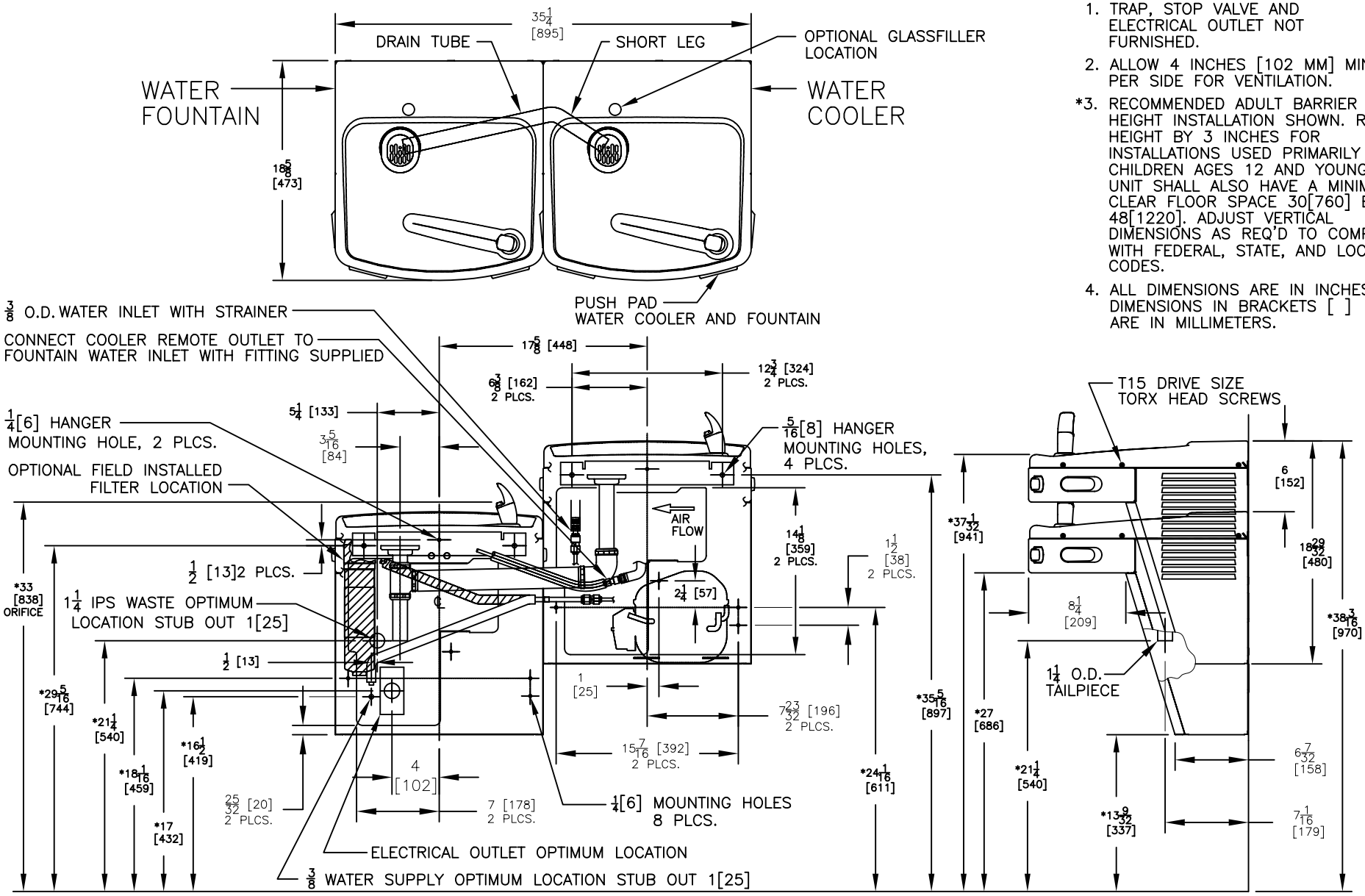

RIGHT SIDE HIGH CONFIGURATION

(SEE SHEET 2 FOR RIGHT SIDE LOW)

Haws corporation
INFO FAX : 1-888-FAX-HAWS (1-888-329-4297)
1455 Kleppe Ln, Sparks NV, 89431
Phone: 775-359-4712 Fax: 775-359-7424
Haws Ag Bachweg 3 CH-3401 Burgdorf Switzerland
Haws Mfg Pte Ltd 74 Sungei Kadut Loop Singapore 729531
e-mail: Haws@hawsco.com website: www.hawsco.com

ECR NO.	REVISED PER	BY:	MODEL(S):	PART NUMBER:
4033	ECN:		HWUACP8L/HWUACP8LSS	0002080378.D
DRAWN: FELIX V.	DATE: 3/10/08	CHK'D.:	INFO FAX DOC #: 24982278/24982577	DRAWING NUMBER: 15340A00 REV. 0
APPROVED:	DATE:		SCALE: NA DRAWING TYPE: INSTALLATION/FAXBACK	SIZE: A SHT. 1 OF 2

DWG. NO. 15340A00

©2006 Haws Corporation - All Rights Reserved HAWS® and other trademarks used in these materials are the exclusive property of Haws Corporation.

THIS DOCUMENT IS TRUE AND CORRECT AT TIME OF PUBLICATION. CONTINUED PRODUCT IMPROVEMENTS MAKE SPECIFICATIONS AND MEASUREMENTS SUBJECT TO CHANGE WITHOUT NOTICE.

NOTES:

1. TRAP, STOP VALVE AND ELECTRICAL OUTLET NOT FURNISHED.
2. ALLOW 4 INCHES [102 MM] MIN. PER SIDE FOR VENTILATION.

*3. RECOMMENDED ADULT BARRIER FREE HEIGHT INSTALLATION SHOWN. REDUCE HEIGHT BY 3 INCHES FOR INSTALLATIONS USED PRIMARILY BY CHILDREN AGES 12 AND YOUNGER. UNIT SHALL ALSO HAVE A MINIMUM CLEAR FLOOR SPACE 30[760] BY 48[1220]. ADJUST VERTICAL DIMENSIONS AS REQ'D TO COMPLY WITH FEDERAL, STATE, AND LOCAL CODES.

4. ALL DIMENSIONS ARE IN INCHES. DIMENSIONS IN BRACKETS [ ] ARE IN MILLIMETERS.

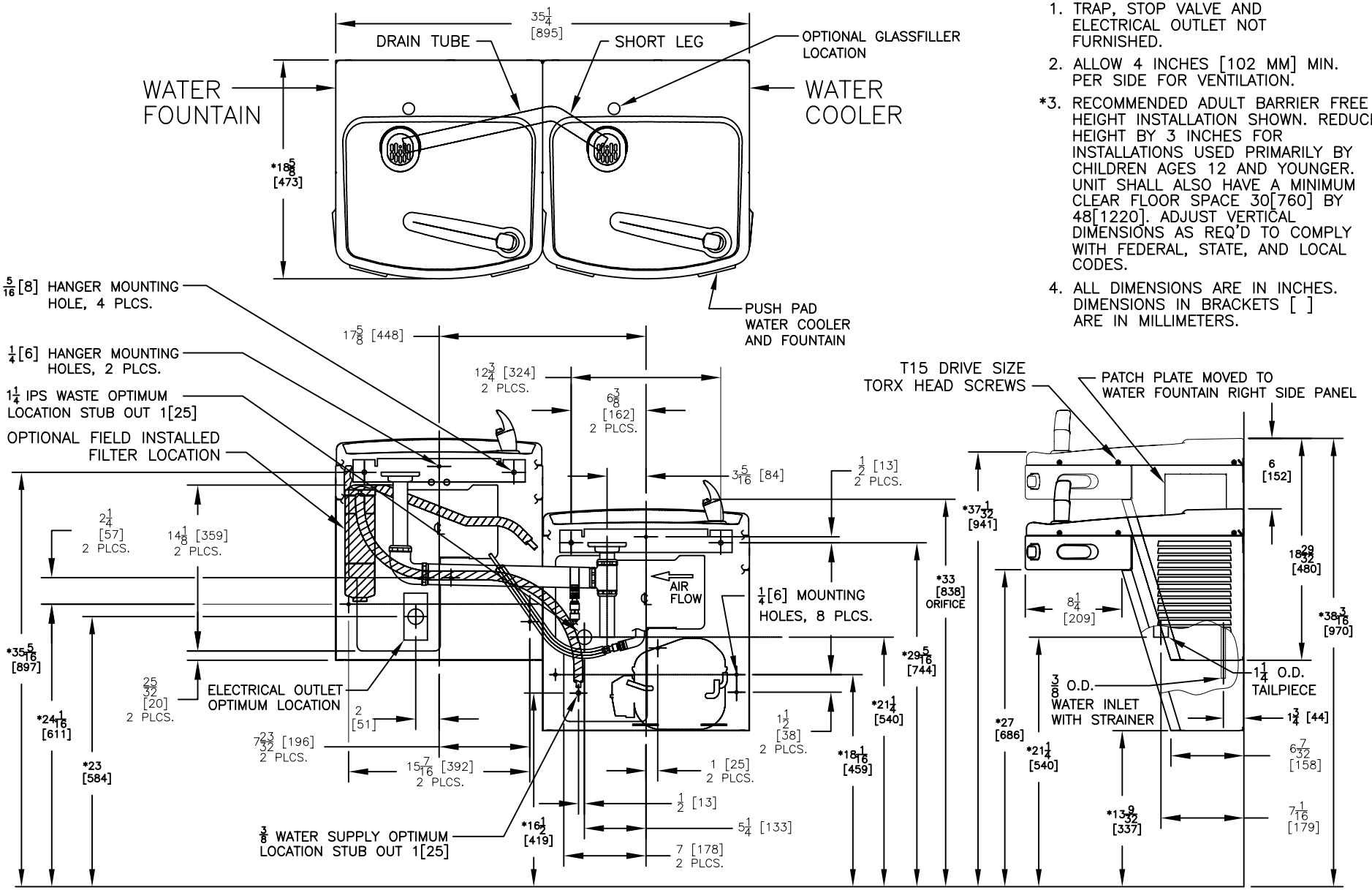

RIGHT SIDE LOW CONFIGURATION

(SEE SHEET 1 FOR RIGHT SIDE HIGH)

INFO FAX : 1-888-FAX-HAWS (1-888-329-4297)
1455 Kleppe Ln, Sparks NV, 89431
Phone: 775-359-4712 Fax: 775-359-7424
Haws Ag Bachweg 3 CH-3401 Burgdorf Switzerland
Haws Mfg Pte Ltd 74 Sungei Kadut Loop Singapore 729531
e-mail: Haws@hawsco.com website: www.hawsco.com

ECR NO.	REVISED PER	BY:	MODEL(S):	PART NUMBER:
4033	ECN:		HWUACP8L/HWUACP8LSS	002080378.D
DRAWN: FELIX V.	DATE: 3/10/08	CHK'D.:	INFO FAX DOC #: 24982278/24982577	DRAWING NUMBER: 15340A00 REV. 0
APPROVED:	DATE:		SCALE: (1/12) DRAWING TYPE: INSTALLATION/FAXBACK	SIZE: A SHT. 2 OF 2

DWG. NO. 15340A00

©2006 Haws Corporation - All Rights Reserved HAWS® and other trademarks used in these materials are the exclusive property of Haws Corporation.