Halsey Taylor Owners Manual

8880 FOUNTAIN

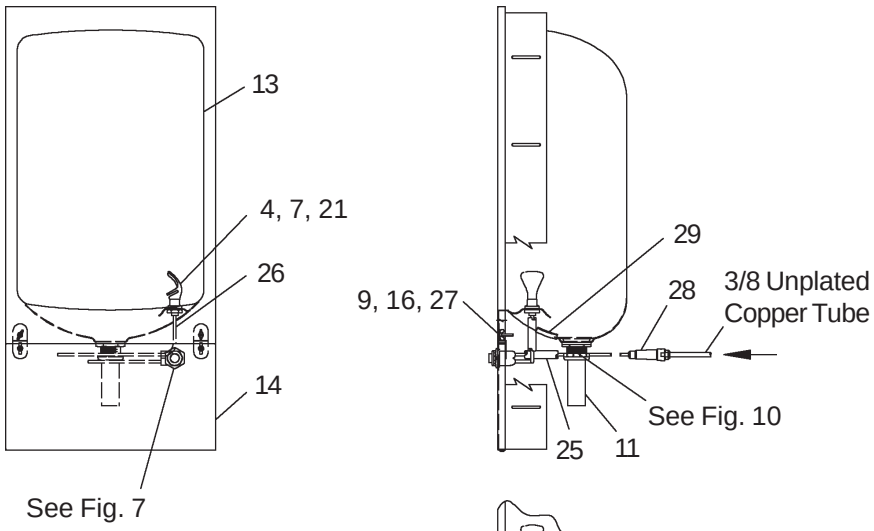

8880 FOUNTAIN W/CUSPIDOR

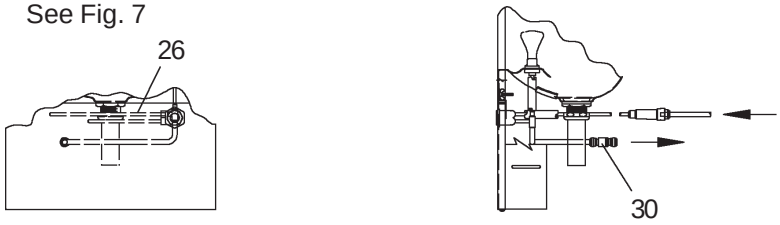

10245 CUSPIDOR

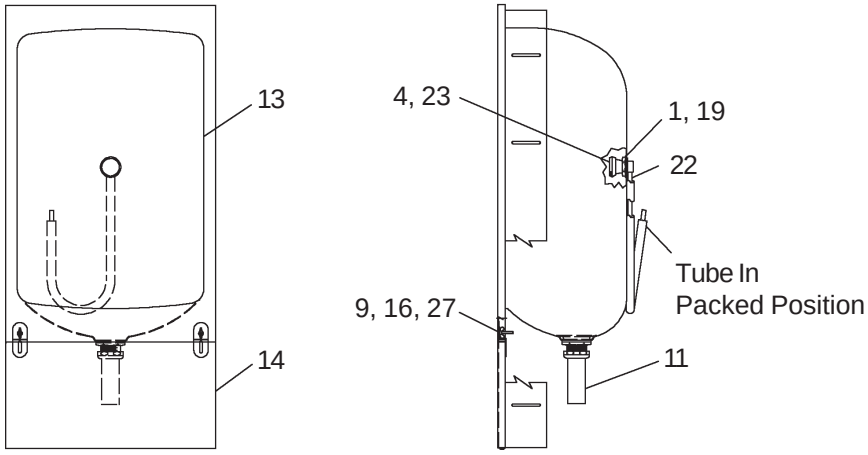

INSTALLER

Halsey Taylor Fountains are among the easiest to install Fountains on the market today. To assure you install these models easily and correctly, PLEASE READ THESE SIMPLE INSTRUCTIONS BEFORE STARTING THE INSTALLATION. CHECK YOUR INSTALLATION FOR COMPLIANCE WITH PLUMBING, ELECTRICAL, AND OTHER APPLICABLE CODES. After installation, leave these instructions with the Fountain for future reference.

IMPORTANT

ALL SERVICE TO BE PERFORMED BY AN AUTHORIZED SERVICE PERSON

ROUGH-IN DIMENSIONS

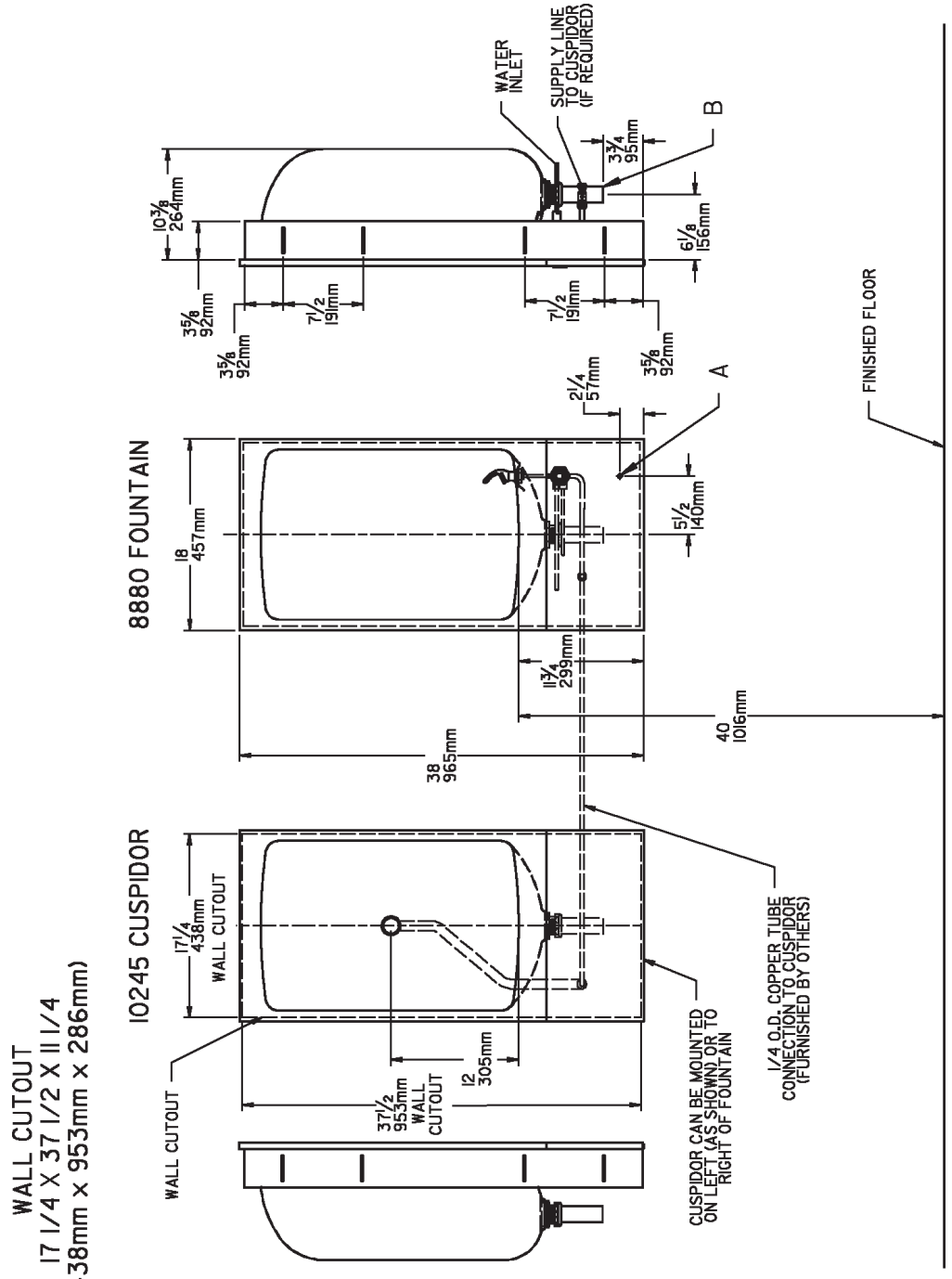

FIG. 1

LEGEND/LEYENDA/LÉGENDE

A = RECOMMENDED WATER SUPPLY LOCATION 3/8 O.D. UNPLATED COPPER TUBE CONNECT STUB 1-1/2 IN. (38 mm) OUT FROM WALL SHUT OFF BY OTHERS

SE RECOMIENDA UBICAR EL TUBO CORTO DE CONEXIÓN AL TUBO DE COBRE SIN CHAPAR DE 3/8" DE DIÁM. EXT. A 1-1/2" (38 mm) FUERA DE LA LLAVE DE PASO EN LA PARED COLOCADA POR TERCEROS.

EMPLACEMENT RECOMMANDÉ D'ALIMENTATION EN EAU PAR TUBE EN CUIVRE NON PLAQUÉ DE 3/8 PO. (9,5 mm) D.E. CONNECTANT UNE TUYAUTERIE DE 1-1/2 PO. (38 mm) DEPUIS LE ROBINET D'ARRÊT FOURNI PAR D'AUTRES.

B = RECOMMENDED LOCATION FOR WASTE OUTLET 1-1/2" O.D. DRAIN

UBICACIÓN RECOMENDADA PARA EL DRENAJE DE SALIDA DE AGUA, DE 1-1/2" DE DIÁMETRO.

EMPLACEMENT RECOMMANDÉ POUR LE DRAIN DE D.E. 1-1/2" DE SORTIE D'EAU.

INSTALLATION INSTRUCTIONS

1. Prepare the wall cutout opening(s). Refer to rough-In drawing on page 2.

2. Remove noise pad from paper and locate on bottom back of the basin between the drain and the bubbler holes (See Fig. 3).
CAUTION: TO INSURE PAD DOES NOT INTERFERE WITH THE HOLE AREAS, TRIM THE PAD SO THERE IS APPROXIMATELY 1/2" (13mm) CLEARANCE AROUND THE HOLES.

3. Prepare waste connection(s) and water supply hookup connection. Refer to Rough-In drawing for location details on page 2.
NOTE: Access to the rear of the fountain is desirable to ease installation. If rear access is not obtainable an access panel (furnished by others) should be installed below the fountain.

4. Attach basin mounting brackets to basin studs located in the lower corner with two (2) provided wing nuts (See Fig. 4). Tighten securely.

5. Install the basin. Place the upper edge of the basin above the hanges in the wall frame. Slide the basin down until it engages the hanger. Be sure the basin is firmly engaged before releasing it. Secure the bottom of the fountain to the wall frame. If fountain is used with the 10245 Cuspidor repeat above steps.
NOTE: SCREWS FOR ATTACHING THE FOUNTAIN HANGER BRACKET AND BASIN ARE NOT INCLUDED.

6. Connect waste line traps to the fountain (and cuspidor if required). Connect water supply line service stop to the water inlet line on the 8880 Fountain. Fountain is supplied with a 3/8" unplated copper water hookup line with a strainer. The fountain must be connected through the strainer to elminate damage to the water regulator on/off control.
NOTE: WASTELINE TRAP(S) AND SERVICE SUPPLY STOPS ARE NOT INCLUDED.

7. 10245 Cuspidor only. Connect outlet of the check valve to the inlet line, to the sprayer head, on the 10245 Cuspidor. Check valve flow direction must be as shown for correct operation on page 1.

8. Open service stop and operate push button to purge air from system. Check thoroughly for leaks. Check stream height from bubbler. Stream height is factory set at 45-50 PSI. If supply pressure varies greatly from this, remove items 15 and 17 and adjust screw on regulator (item 24) see figure 7. Clockwise adjustment will raise stream and CCW adjustment will lower stream height. For best adjustment stream height should be approximately 1-1/2" (38mm) above the bubbler guard. (See Fig.11).

9. Assemble cover plate to bottom of fountain with screws supplied.

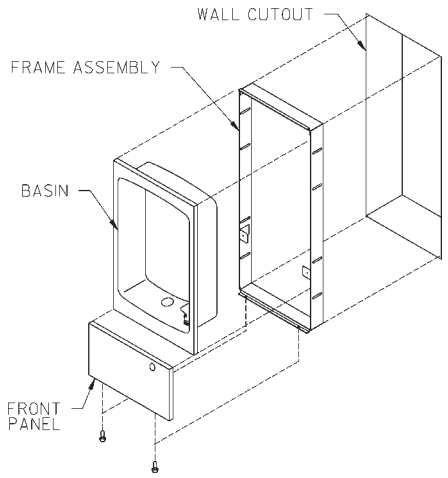

FIG. 2

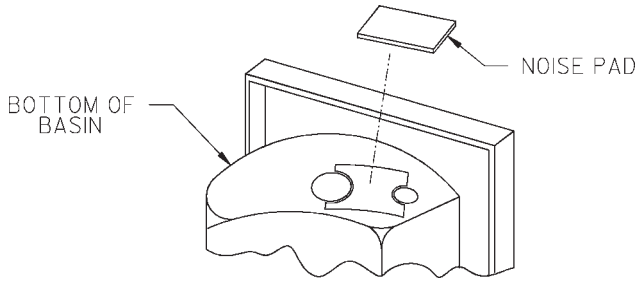

FIG. 3

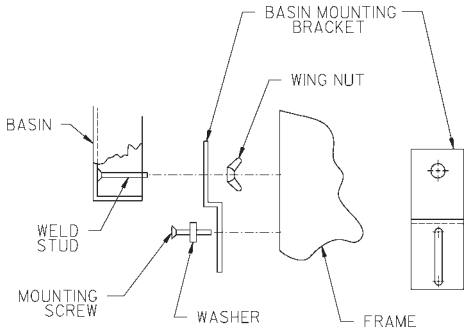

FIG. 4

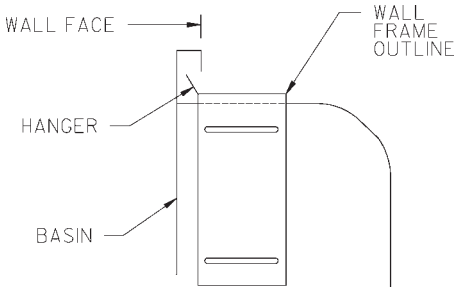

FIG. 5

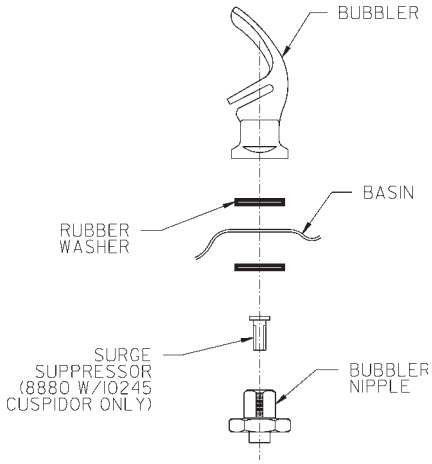

FIG. 6

ITEMIZED PARTS LIST

ITEM NO.	PART NO. 8880 FTN	PART NO. 8880 W/CUSP	PART NO. 10245 CUSP	DESCRIPTION
1	-	-	100115824740	Gasket 1-1/4 I.D.
2	100147140560	100147140560	100147140560	Gasket
3	15005C	15005C	15005C	Nut - Retainer
4	100322740560	100322740560	100322740560	Gasket - Black
5	100352940560	100352940560	100352940560	Gasket - Slipnut
6	161637308640	161637308640	161637308640	Drain Plug
7	-	102688531550	-	Suppressor - Surge
8	110346220550	110346220550	110346220550	Locknut - 1 1/2 x 11 1/2
9	110857443890	110857443890	110857443890	Wing Nut 10-24
10	160270508640	160270508640	160270508640	Strainer Plate - Chrome
11	160346108640	160346108640	160346108640	Tailpiece - 1 1/2 OD x 4
12	160346308640	160346308640	160346308640	Slipnut - 1 1/2
13	170857042830	170857042830	401024642830	Basin
14	23005C	23005C	402662942830	Front Panel
15	40048C	40048C	-	Button - Chrome
16	400867142550	400867142550	400867142550	Receptor Bracket
17	40089C	40089C	-	Cover Nut - Chrome
18	40169C	40169C	-	Hex Nut - Chrome
19	-	-	411564208640	Nut
20	50986C	50986C	-	Regulator Holder
21	51546C	51546C	-	Bubbler - Chrome
22	-	-	601563851550	Tube Assy
23	-	-	610810751640	Cuspidor Head
24	61313C	61313C	-	Regulator
25	62129C	62129C	-	Tube - Water In
26	62300C	66210C	-	Tube Assy - Bubbler
27	70415C	70415C	70415C	Washer - Flat #10
28	55996C	55996C	-	Strainer
29	74050011	74050011	-	Noise Pad
30	-	75494C	-	Check Valve - 3/8
NS	101637451550	101637451550	101637451550	Friction Ring

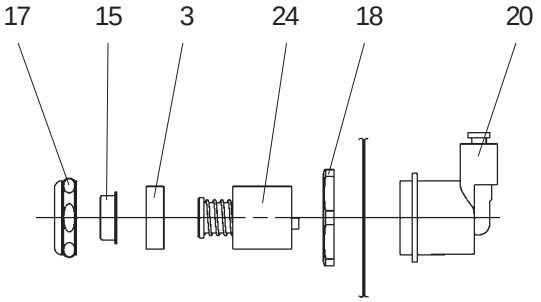

FIG. 7

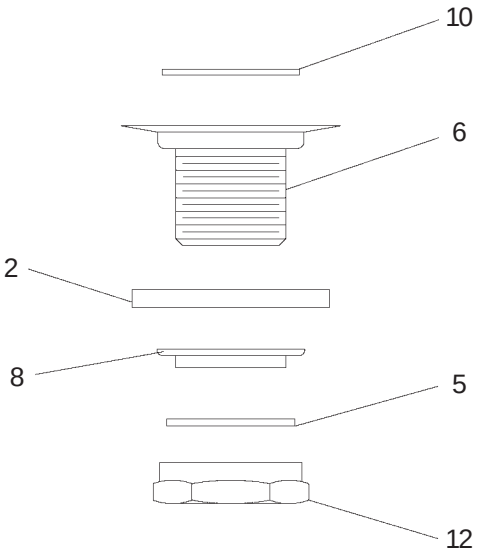

FIG. 10

OPERATION OF QUICK CONNECT FITTINGS

Cooler is provided with lead-free connectors which utilize an o-ring water seal. To remove tubing from the fitting, relieve water pressure, push in on the gray coolar while pulling out on the tubing. To insert tubing, push tube straight into fitting until it reaches a positive stop, approximately 3/4".

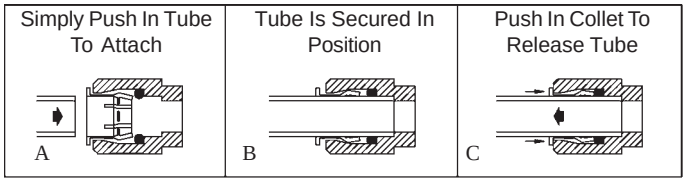

Insert tube to a positive stop approximately 3/4 of an inch

Pushing Tube In Before Pulling It Out Helps To Release Tube.

FIG. 8

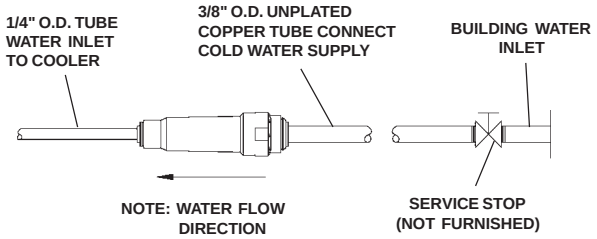

FIG. 9

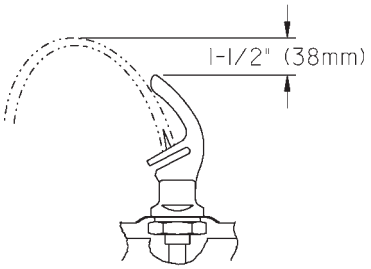

CORRECT STREAM HEIGHT

FIG. 11

Halsey Taylor
2222 CAMDEN COURT
OAK BROOK, IL 60523
630.574.3500
PRINTED IN U.S.A.

FOR PARTS, CONTACT YOUR LOCAL DISTRIBUTOR OR VISIT OUR WEBSITE WWW.HALSEYTAYLOR.COM